CATALOG NUMBER	DESCRIPTION	BOLT SIZE
6502	EYENUT	5/8"
6503	EYENUT	3/4"

- NOTES -

1. MATERIAL: MINIMUM 1020 HOT FORGED STEEL WITH ELONGATION GREATER THAN OR EQUAL TO 20%.
2. HOT DIP GALVANIZE PER ASTM A153 (LATEST REV).
3. ALL DIMENSIONS IN INCHES UNLESS OTHERWISE NOTED.
4. PART MARKED WITH C-"X" WHERE "X" IS THE MANUFACTURE'S ID

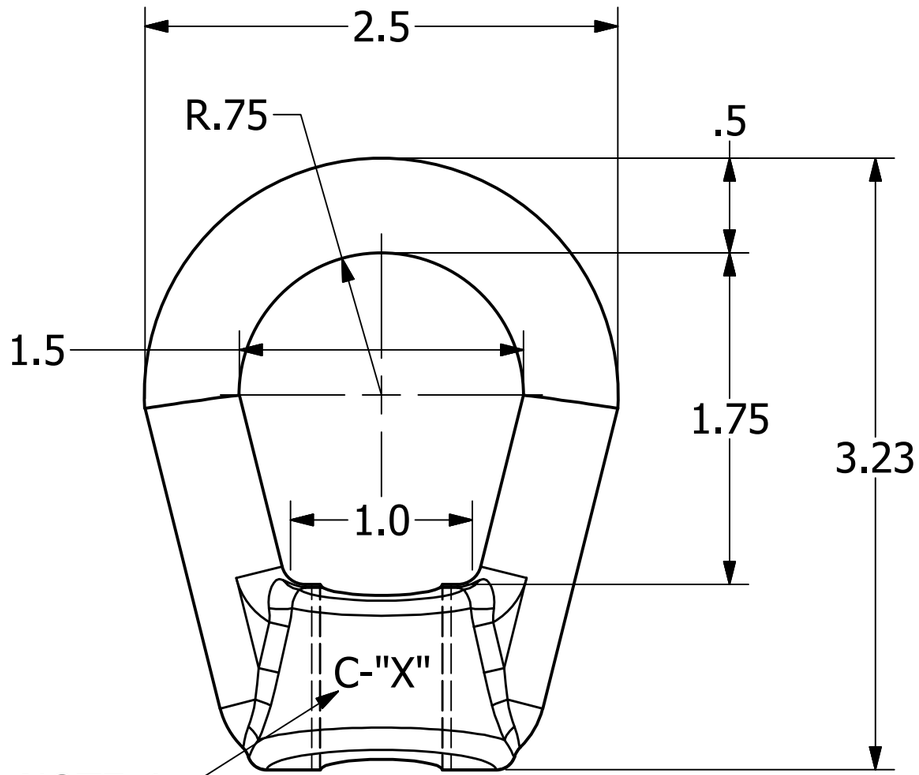

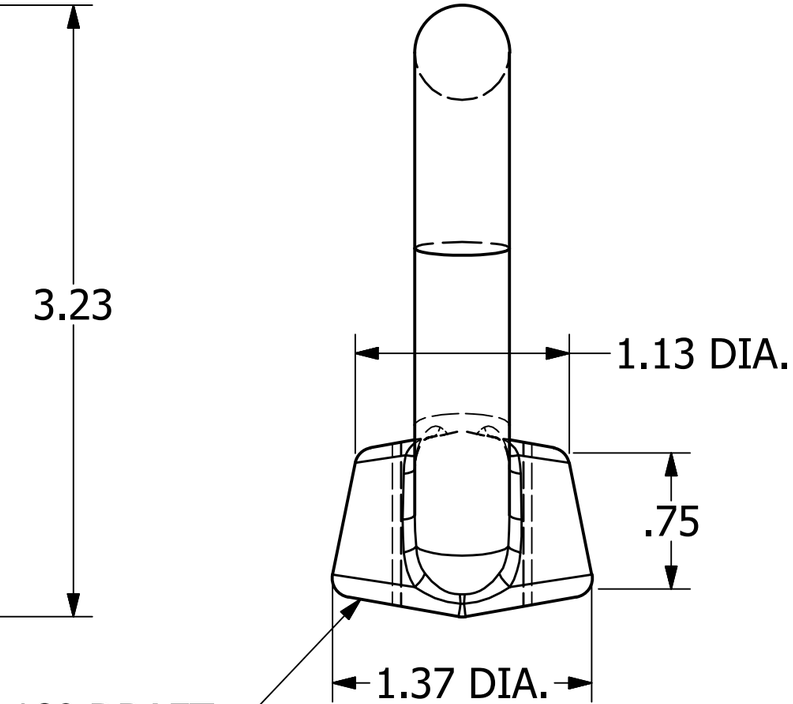

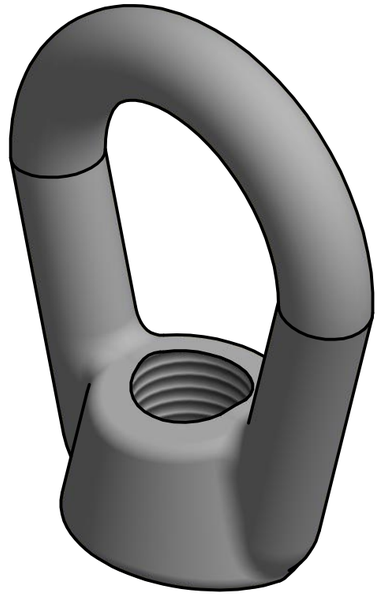

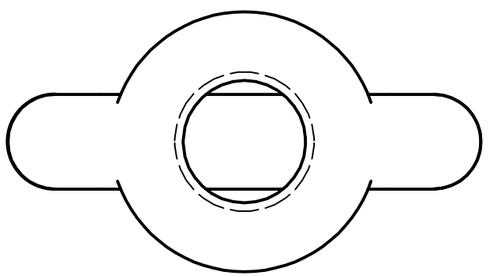

CHANCE®	HUBBELL POWER SYSTEMS, INC.			
CONFIDENTIAL: THIS DRAWING AND ITS CONTENTS ARE CONFIDENTIAL AND THE EXCLUSIVE PROPERTY OF HUBBELL POWER SYSTEMS. NO PUBLICATION, DISTRIBUTION, OR COPIES MAY BE MADE WITHOUT THE WRITTEN CONSENT OF HUBBELL POWER SYSTEMS. HUBBELL POWER SYSTEMS UNPUBLISHED ALL RIGHTS RESERVED UNDER THE COPYRIGHT LAWS.	TITLE: EYENUT			
	SIZE: B	CAT / PART / ASSY NO.: SEE CHART	DWG NO.: SA6502	REV: D
	DO NOT SCALE THIS DRAWING	DRN BY: SCRIVNER	DATE: 02/03/83	SHEET 1 OF 1